TAPS & FITTINGS LOOP & FRIENDS

PRODUCT INFORMATION

1 . POSITION



Article number	TVZ10601000061
Article title	Villeroy & Boch Loop & Friends Single-lever basin mixer without waste, Chrome
Product designation	Single-lever basin mixer
Collection	Loop & Friends
Assembly / Assembly type	wall-mounted
Scope of delivery	1 x tap fitting , 1 x aerator key 1 x installation instructions
Length in mm	225
Width in mm	60
Height in mm	60
Weight in kg	1,10
Material	Brass
Surface	glossy
Colour name	Chrome
EAN number	4062373887127
Air plus	An aerator enriches the water with air for a particularly soft, water-saving jet
Aqua smart	Sustainable, limited water flow: saving water without sacrificing on performance
Tap smartpressure	Constant water flow rate for washbasin mixers regardless of pressure fluctuations in the piping system
Length of spout in mm	207
Material	Brass
Volume	5,04
Angle jet regulator	10
Cartridge	Cartridge with ceramic discs
Handle position	Variable
Diameter of faucet body	30
Swivel aerator	No
Water regulation	Water temperature is regulated 45° to each side
Thermostat	No
Cool Tap	No
Spray types	Comfort jet

COLOUR

COLOUR DESIGNATION



Chrome

TECHNICAL DRAWINGS

TVZ10601000061

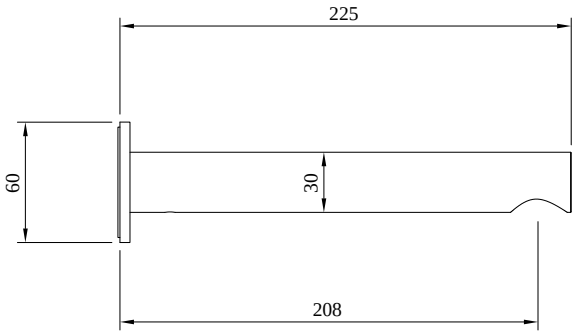

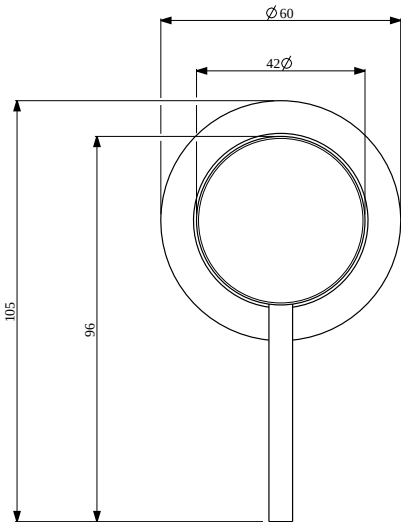

CHARACTERISTICS



An aerator enriches the water with air for a particularly soft, water-saving jet



Sustainable, limited water flow: saving water without sacrificing on performance



Constant water flow rate for washbasin mixers regardless of pressure fluctuations in the piping system

EXPLOSION DRAWINGS

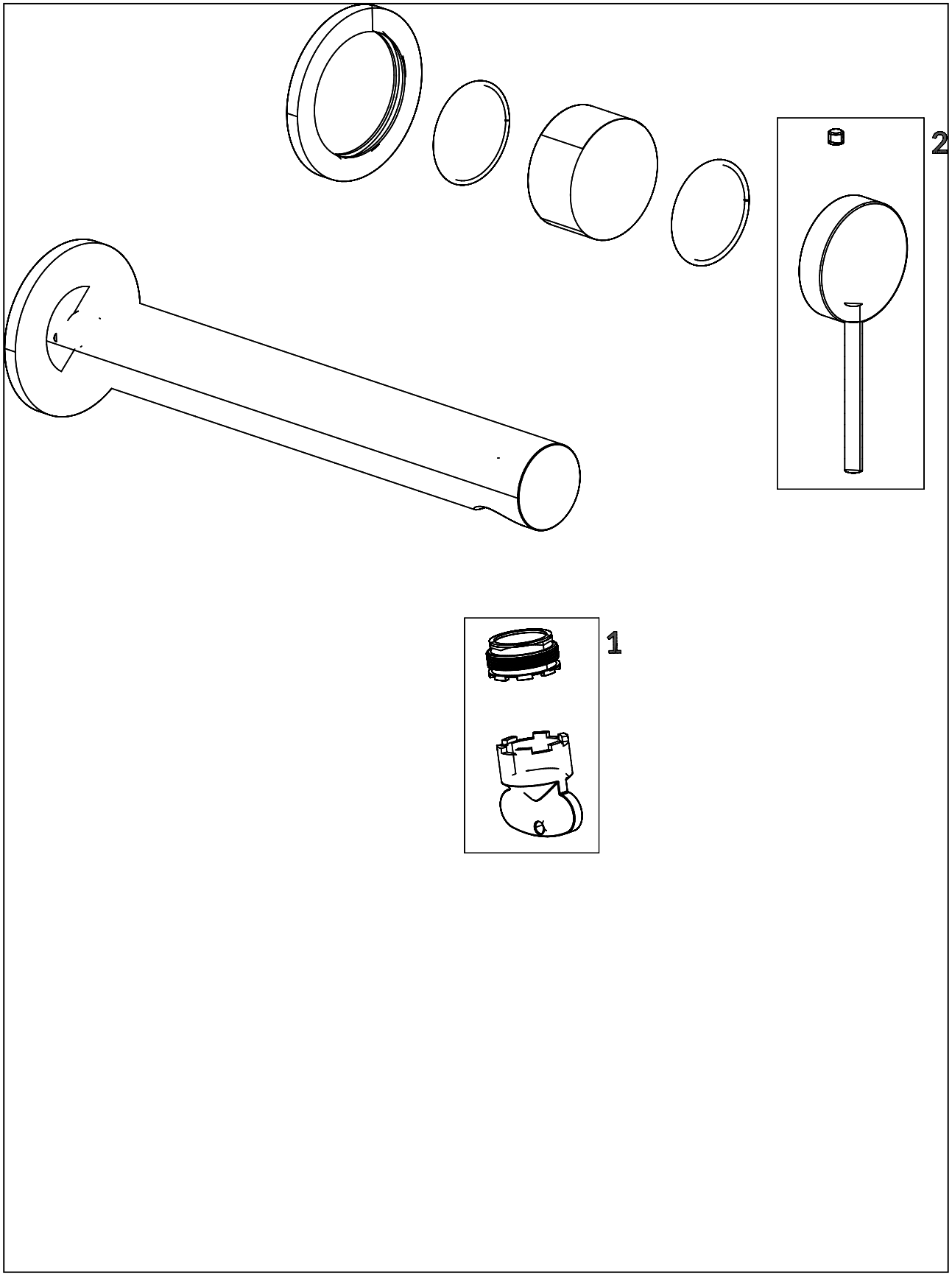

BILL OF MATERIALS

No.	Article No.	Description	Quantity
2	TVP10600900061	Handle set	1
1	TVP00003500000	Aerator set	1