TAPS & FITTINGS ARCHITECTURA SQUARE

PRODUCT INFORMATION

1 . POSITION



Article number	**TVW12500100061**
Article title	Villeroy & Boch Architectura Square Single-lever basin mixer with push/ pull rod lever and pop-up waste, Chrome
Product designation	Single-lever basin mixer
Collection	Architectura Square
Assembly / Assembly type	Deck-mounted
Scope of delivery	1 x tap fitting , 1 x aerator key 1 x outlet fitting 1 x fastening 2 x connecting hoses 1 x installation instructions
Length in mm	165
Width in mm	50
Height in mm	161
Weight in kg	1,68
Material	Brass
Surface	glossy
Colour name	Chrome
EAN number	4062373755631
Air plus	An aerator enriches the water with air for a particularly soft, water-saving jet
Easy clean	Longer service life: optimum limescale removal by simply rubbing nozzles and aerators clean
Aqua smart	Sustainable, limited water flow: saving water without sacrificing on performance
Tap smartpressure	Constant water flow rate for washbasin mixers regardless of pressure fluctuations in the piping system
Length of spout in mm	130
Material	Brass
Volume	6,669
Angle jet regulator	7
Cartridge	Cartridge with ceramic discs
Handle position	Top
Number of tap holes	1
Swivel aerator	No
Water regulation	Water temperature is regulated 45° to each side
Thermostat	No

Cool Tap	No
Spray types	Comfort jet

COLOUR

COLOUR DESIGNATION



Chrome

TECHNICAL DRAWINGS

TVW12500100061

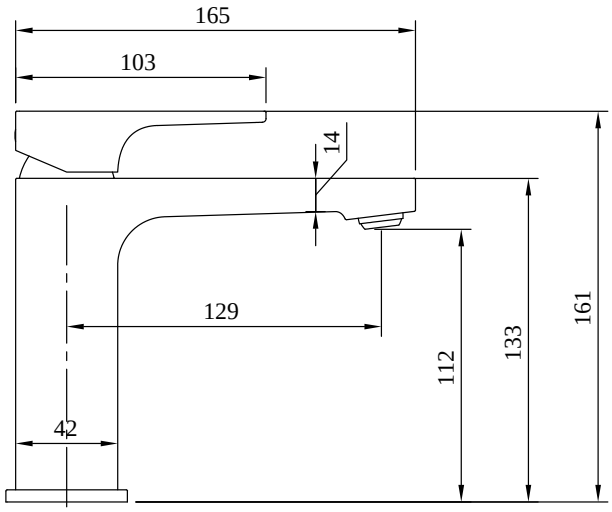

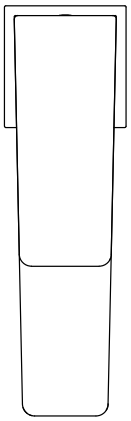

CHARACTERISTICS

Air Plus — An aerator enriches the water with air for a particularly soft, water-saving jet

Aqua Smart — Sustainable, limited water flow: saving water without sacrificing on performance

Easy Clean — Longer service life: optimum limescale removal by simply rubbing nozzles and aerators clean

Smart Pressure — Constant water flow rate for washbasin mixers regardless of pressure fluctuations in the piping system

FLOW CHART

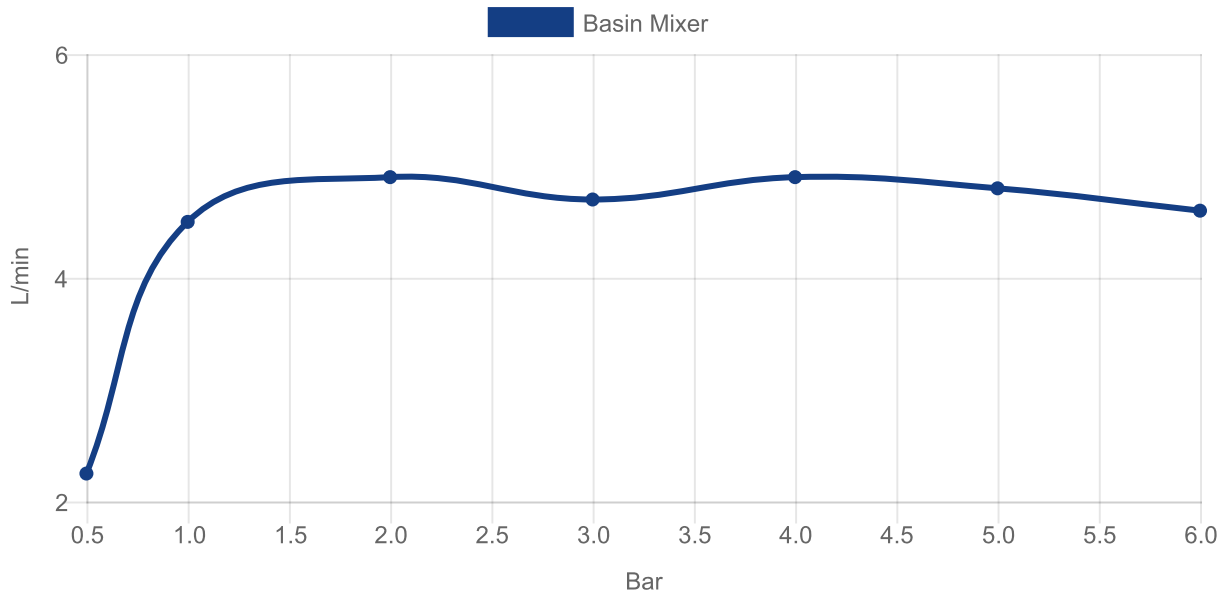

EXPLOSION DRAWINGS

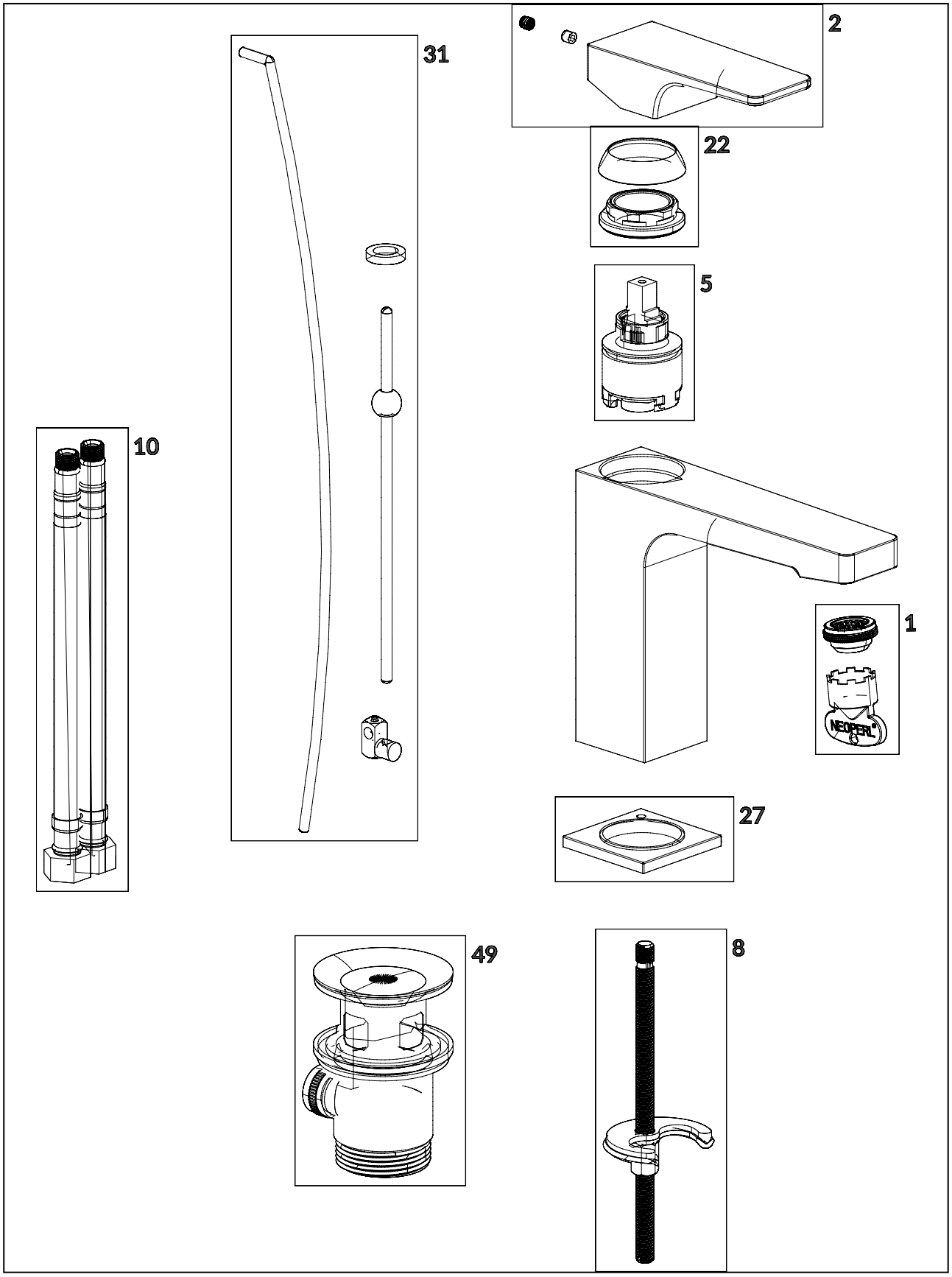

BILL OF MATERIALS

No.	Article No.	Description	Quantity
5	TVP00000105000	Cartridge	1
10	TVP00000702000	Connecting hoses	1
1	TVP00000513000	Aerator set	1
49	TVP00000201061	Waste system	1
8	TVP00000601000	Fastening set	1
2	TVP12500100061	Handle set	1
27	TVP12500200061	Base ring	1