TAPS & FITTINGS LIBERTY

PRODUCT INFORMATION

1 . POSITION



Article number	**TVW10700100061**
Article title	Villeroy & Boch Liberty Single-lever basin mixer with push/pull rod lever and pop-up waste, Chrome
Product designation	Single-lever basin mixer
Collection	Liberty
Assembly / Assembly type	Deck-mounted
Scope of delivery	1 x tap fitting , 1 x aerator key 1 x outlet fitting 1 x fastening 2 x connecting hoses 1 x installation instructions
Length in mm	150
Width in mm	43
Height in mm	135
Weight in kg	3,50
Material	Brass
Surface	glossy
Colour name	Chrome
EAN number	4062373674062
Air plus	An aerator enriches the water with air for a particularly soft, water-saving jet
Aqua smart	Sustainable, limited water flow: saving water without sacrificing on performance
Tap smartpressure	Constant water flow rate for washbasin mixers regardless of pressure fluctuations in the piping system
Length of spout in mm	110
Material	Brass
Volume	5,04
Cartridge	Cartridge with ceramic discs
Handle position	Top
Number of tap holes	1
Diameter of faucet body	43
Swivel aerator	Yes
Water regulation	Water temperature is regulated 45° to each side
Thermostat	No
Cool Tap	No
Spray types	Comfort jet

COLOUR

COLOUR DESIGNATION



Chrome

TECHNICAL DRAWINGS

TVW10700100061

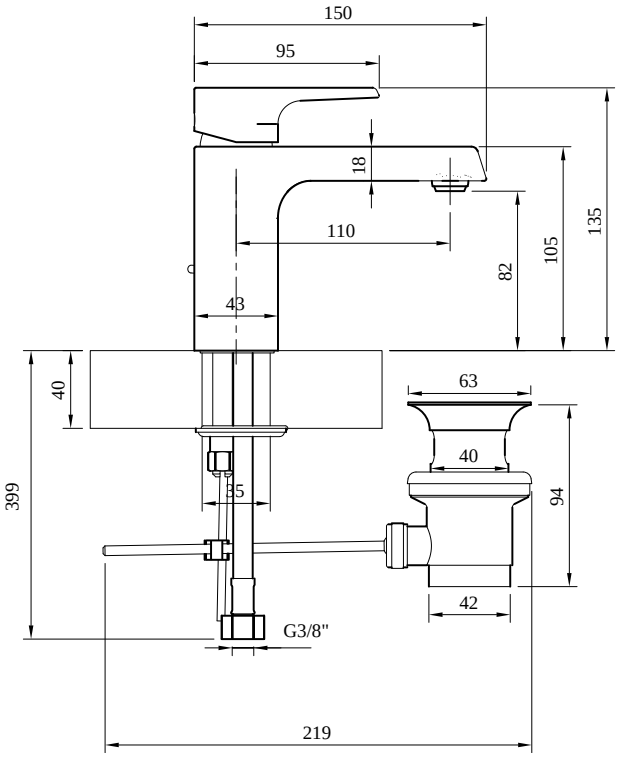

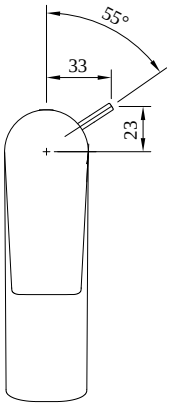

CHARACTERISTICS

An aerator enriches the water with air for a particularly soft, water-saving jet

Sustainable, limited water flow: saving water without sacrificing on performance

Constant water flow rate for washbasin mixers regardless of pressure fluctuations in the piping system

FLOW CHART

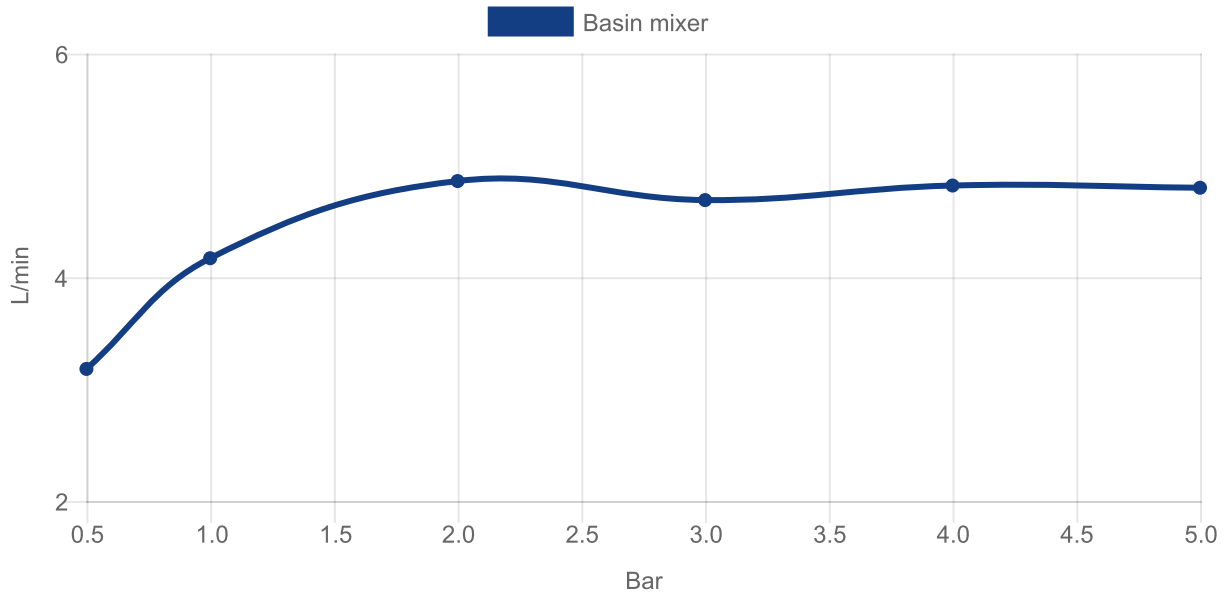

EXPLOSION DRAWINGS

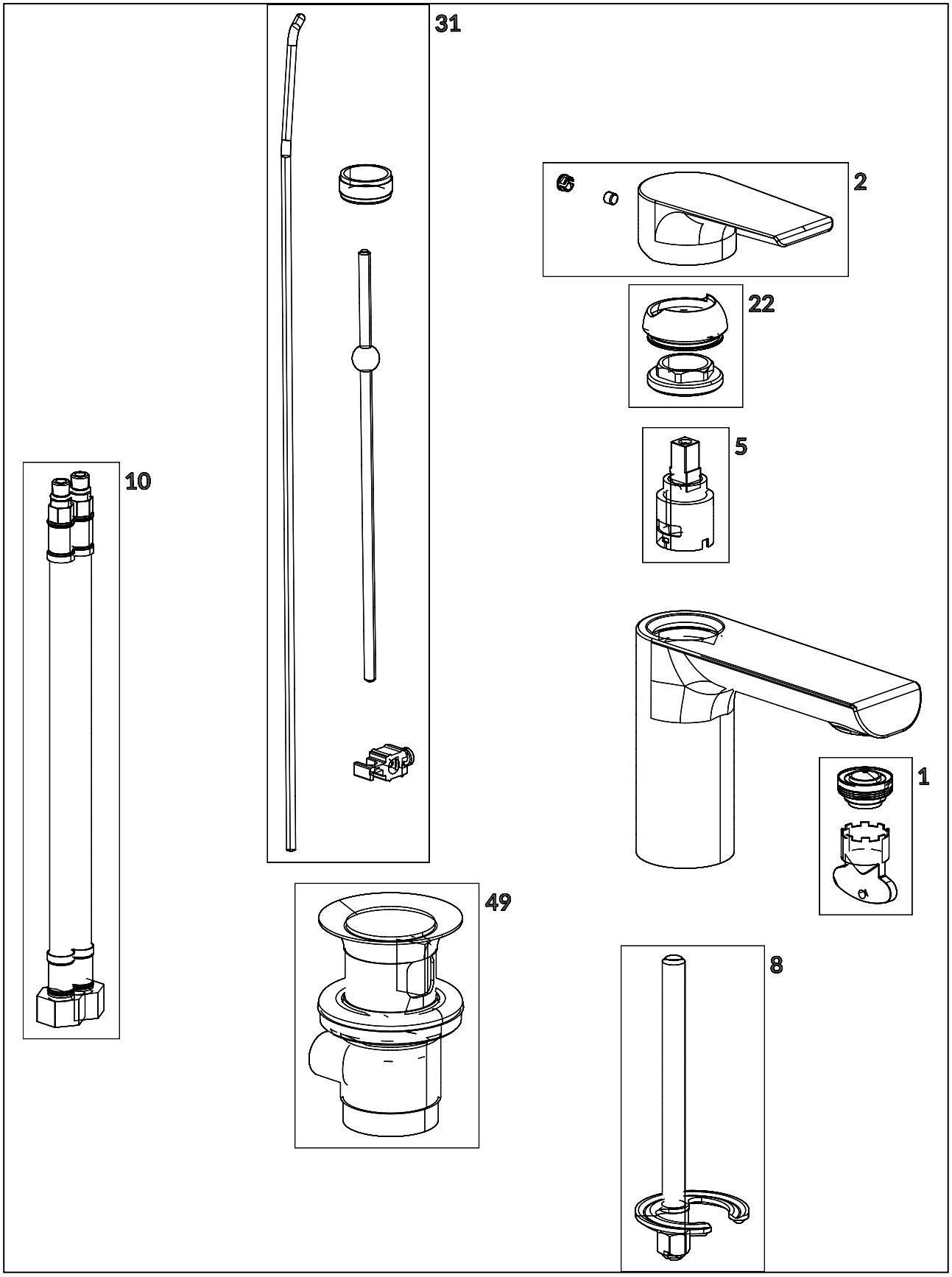

BILL OF MATERIALS

No.	Article No.	Description	Quantity
5	TVP00000108000	Cartridge	1
10	TVP00000704000	Connecting hoses	1
1	TVP00000100400	Aerator set	1
49	TVP00000202061	Waste system	1
8	TVP00000616000	Fastening set	1
2	TVP10700500061	Handle set	1
27	TVP10701700061	Base ring	1