TAPS & FITTINGS LOOP & FRIENDS

PRODUCT INFORMATION

1 . POSITION



Article number	**TVW10610615361**
Article title	Villeroy & Boch Loop & Friends Tall single-lever basin mixer without waste, Chrome
Product designation	Tall single-lever basin mixer
Collection	Loop & Friends
Assembly / Assembly type	Deck-mounted
Scope of delivery	1 x tap fitting , 1 x aerator key 1 x fastening 2 x connecting hoses 1 x installation instructions
Length in mm	219
Width in mm	45
Height in mm	309
Weight in kg	1,80
Material	Brass
Surface	glossy
Colour name	Chrome
EAN number	4051202843960
Air plus	An aerator enriches the water with air for a particularly soft, water-saving jet
Comfort plus	Practical tap fitting height, ideal for combination with surface-mounted washbasins
Tap smartpressure	Constant water flow rate for washbasin mixers regardless of pressure fluctuations in the piping system
Length of spout in mm	182
Material	Brass
Volume	10,66
Cartridge	Cartridge with ceramic discs
Handle position	Top
Number of tap holes	1
Diameter of faucet body	38
Swivel aerator	No
Water regulation	Water temperature is regulated 45° to each side
Thermostat	No
Cool Tap	No
Spray types	Comfort jet

COLOUR

COLOUR DESIGNATION



Chrome

TECHNICAL DRAWINGS

TVW10610615361

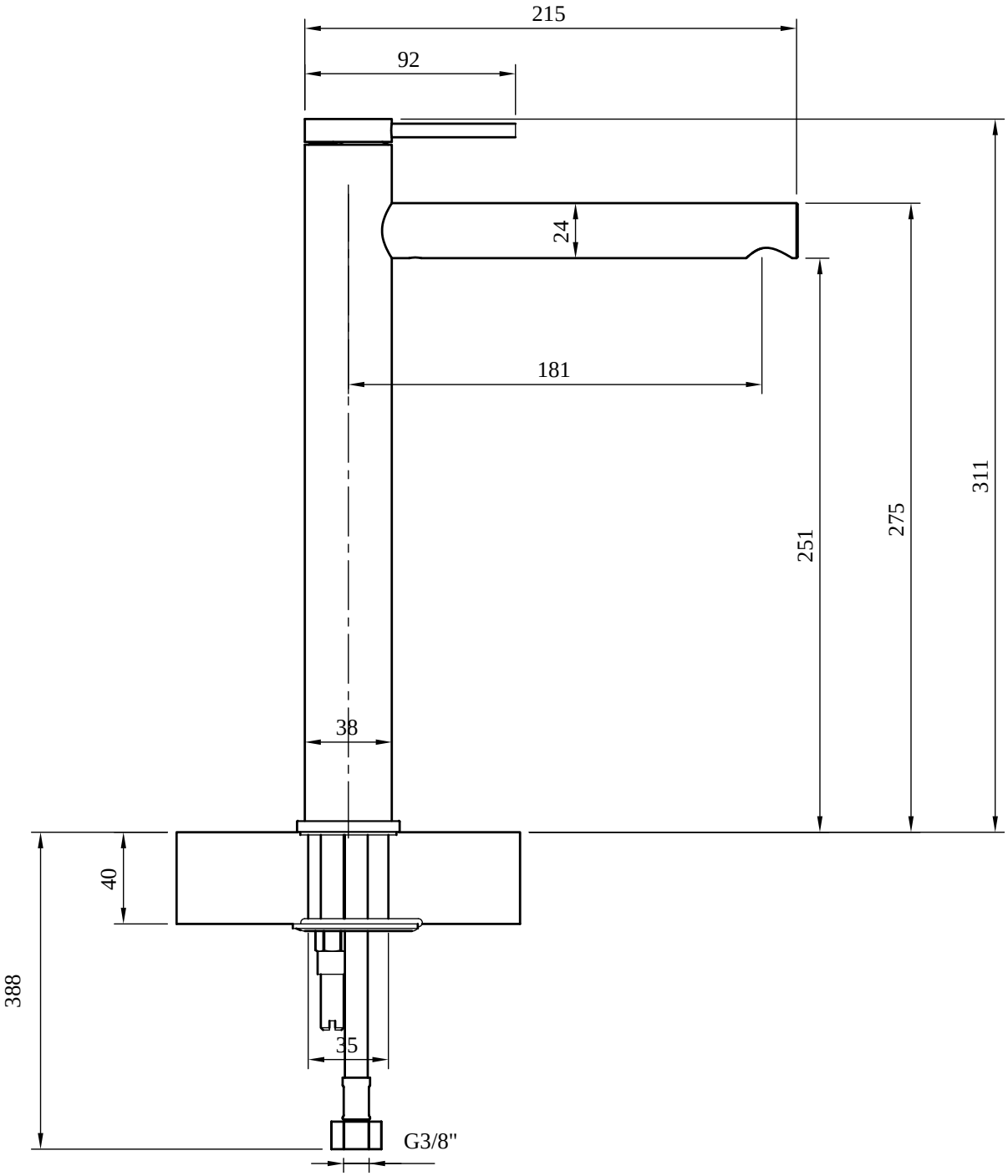

CHARACTERISTICS

Air Plus – An aerator enriches the water with air for a particularly soft, water-saving jet

Comfort Plus – Practical tap fitting height, ideal for combination with surface-mounted washbasins

Smart Pressure – Constant water flow rate for washbasin mixers regardless of pressure fluctuations in the piping system

FLOW CHART

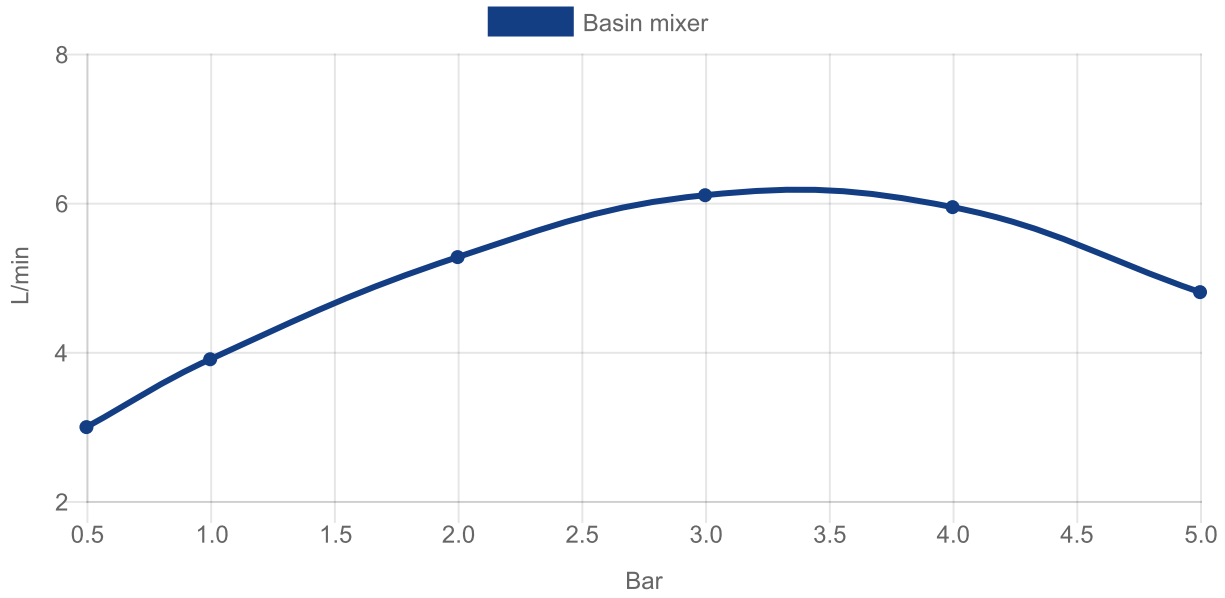

EXPLOSION DRAWINGS

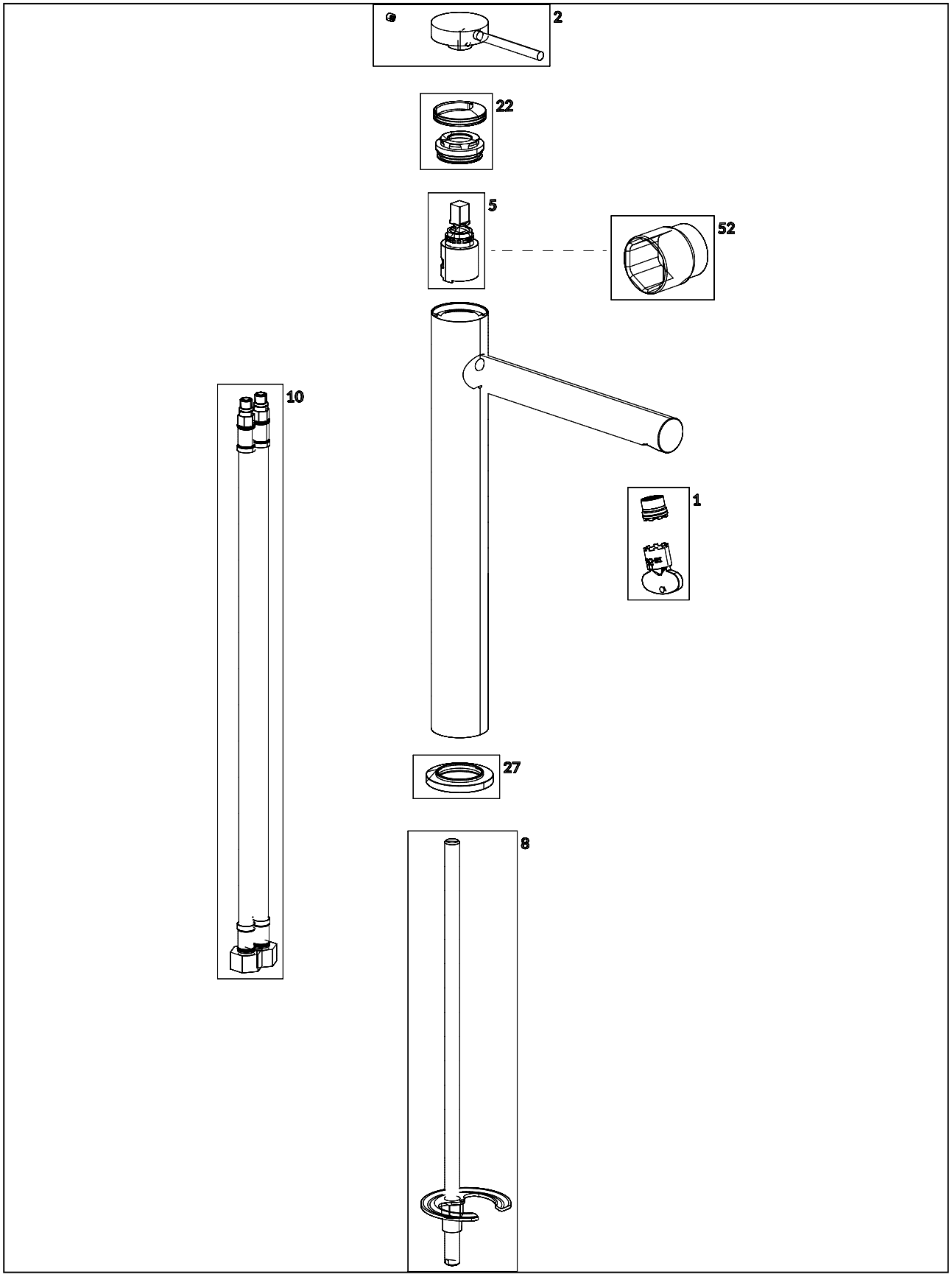

BILL OF MATERIALS

No.	Article No.	Description	Quantity
5	TVP00000107000	Cartridge	1
8	TVP00000616000	Fastening set	1
10	TVP00000704000	Connecting hoses	1
1	TVP00003600000	Aerator set	1
2	TVP10601000061	Handle set	1
52	TVR00000100000		1