TAPS & FITTINGS O.NOVO

PRODUCT INFORMATION

1 . POSITION

Article number	**TVW10410511061**
Article title	Villeroy & Boch O.novo Tall single-lever basin mixer with push-open waste, Chrome
Product designation	Tall single-lever basin mixer
Collection	O.novo
Assembly / Assembly type	Deck-mounted
Scope of delivery	1 x tap fitting , 1 x aerator key 1 x outlet fitting 1 x fastening 2 x connecting hoses 1 x installation instructions
Length in mm	200
Width in mm	50
Height in mm	295
Weight in kg	2,36
Material	Brass
Surface	glossy
Colour name	Chrome
EAN number	4051202465155
Air plus	An aerator enriches the water with air for a particularly soft, water-saving jet
Easy clean	Longer service life: optimum limescale removal by simply rubbing nozzles and aerators clean
Comfort plus	Practical tap fitting height, ideal for combination with surface-mounted washbasins
Aqua smart	Sustainable, limited water flow: saving water without sacrificing on performance
Tap smartpressure	Constant water flow rate for washbasin mixers regardless of pressure fluctuations in the piping system
Length of spout in mm	165
Material	Brass
Volume	9,488
Angle jet regulator	5
Cartridge	Cartridge with ceramic discs
Swivel aerator	No
Thermostat	No
Cool Tap	No
Spray types	Comfort jet

COLOUR

COLOUR DESIGNATION

Chrome

TVW10410511061

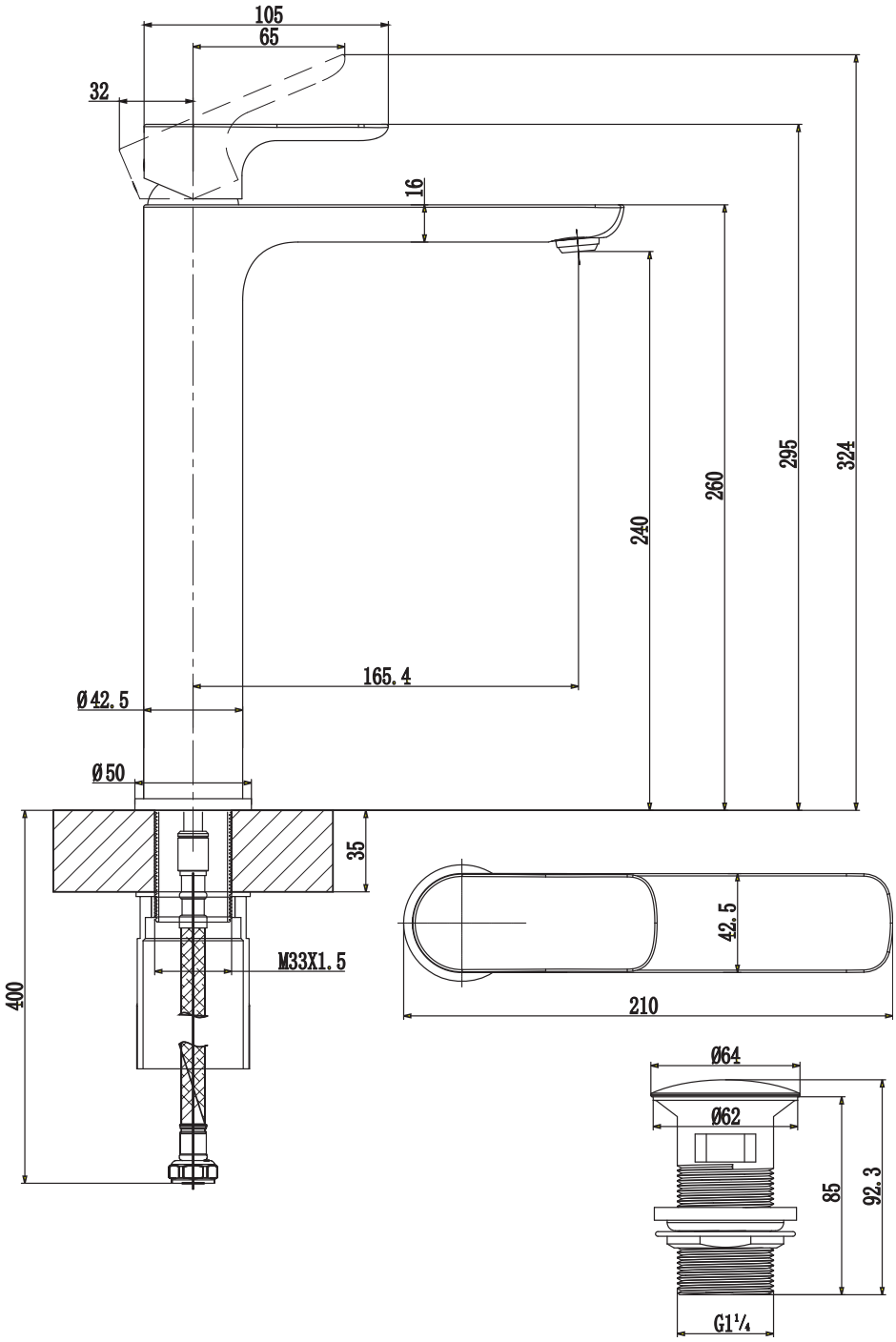

CHARACTERISTICS

Air Plus
Villeroy & Boch

An aerator enriches the water with air for a particularly soft, water-saving jet

Aqua Smart
Villeroy & Boch

Sustainable, limited water flow: saving water without sacrificing on performance

Comfort Plus
Villeroy & Boch

Practical tap fitting height, ideal for combination with surface-mounted washbasins

Easy Clean
Villeroy & Boch

Longer service life: optimum limescale removal by simply rubbing nozzles and aerators clean

Smart Pressure
Villeroy & Boch

Constant water flow rate for washbasin mixers regardless of pressure fluctuations in the piping system

FLOW CHART

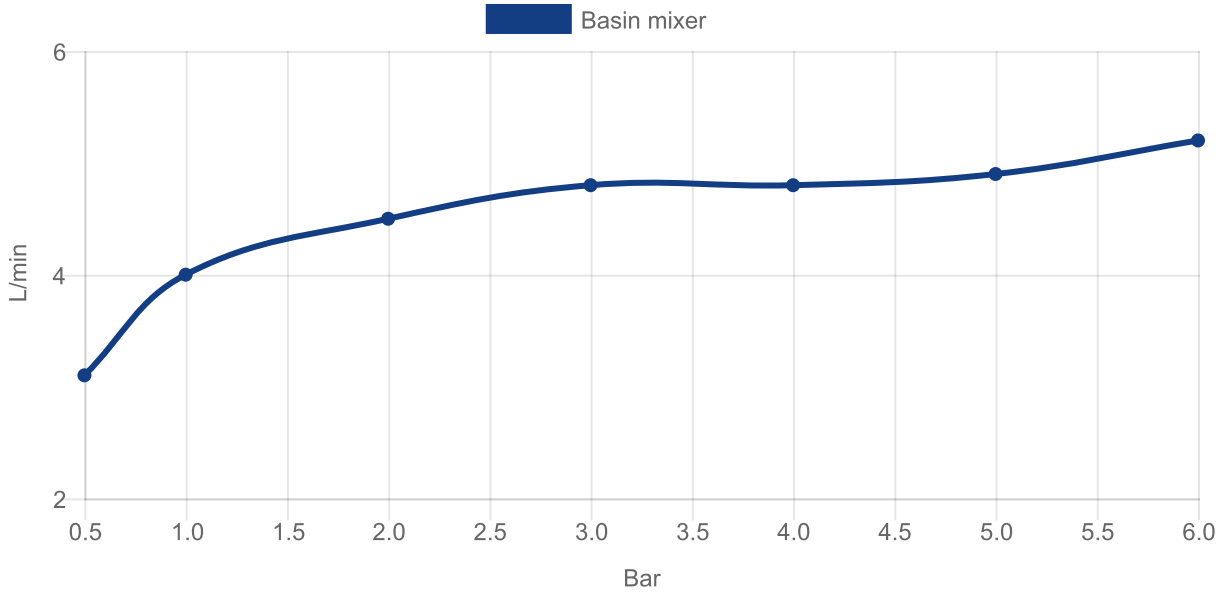

EXPLOSION DRAWINGS

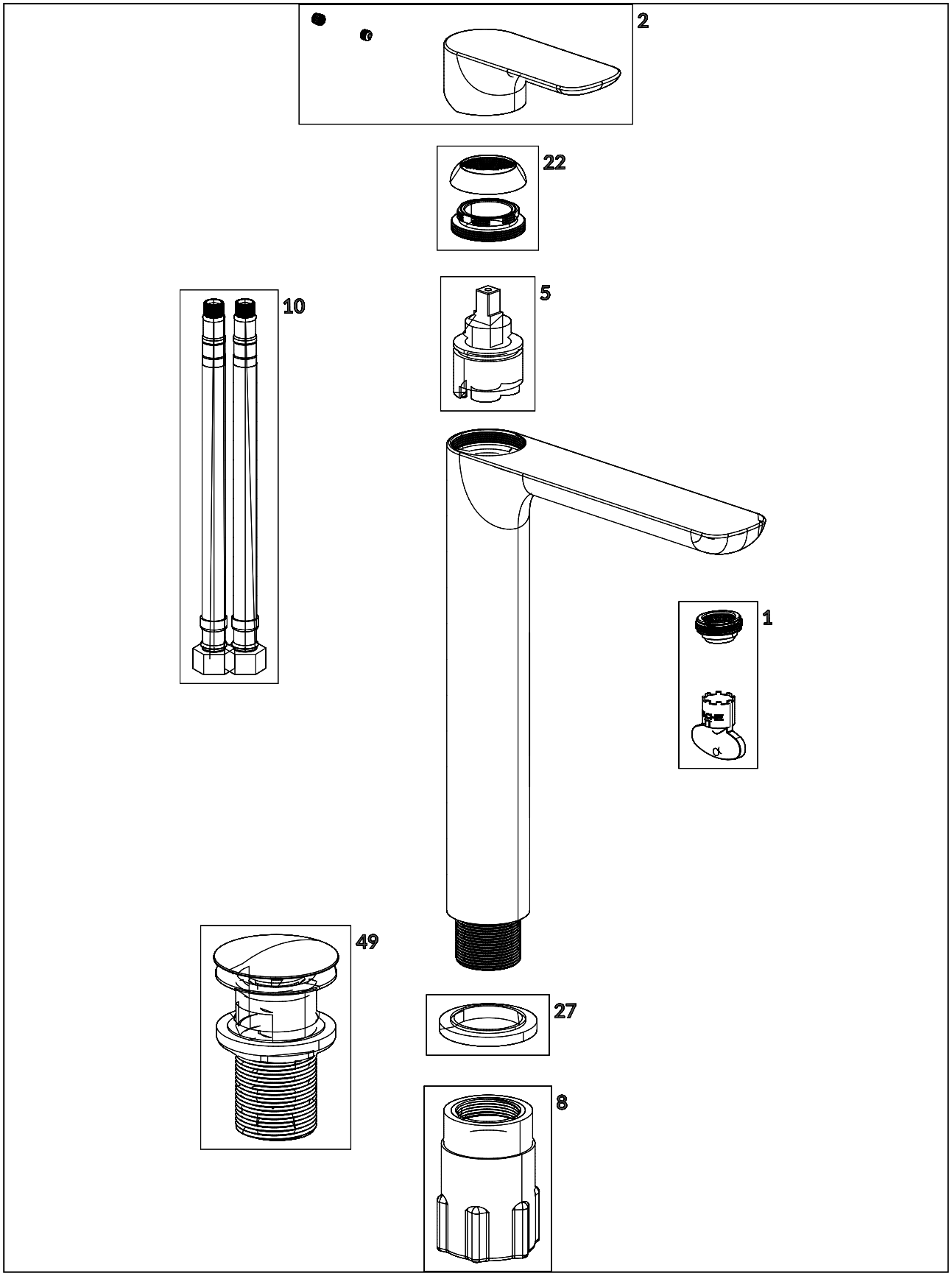

BILL OF MATERIALS

No.	Article No.	Description	Quantity
5	TVP00000105000	Cartridge	1
10	TVP00000702000	Connecting hoses	1
1	TVP00000513000	Aerator set	1
49	TVP00000301061	Push-Open waste	1
2	TVP10400409061	Handle set	1